Project : MT8781, LPDDR4X

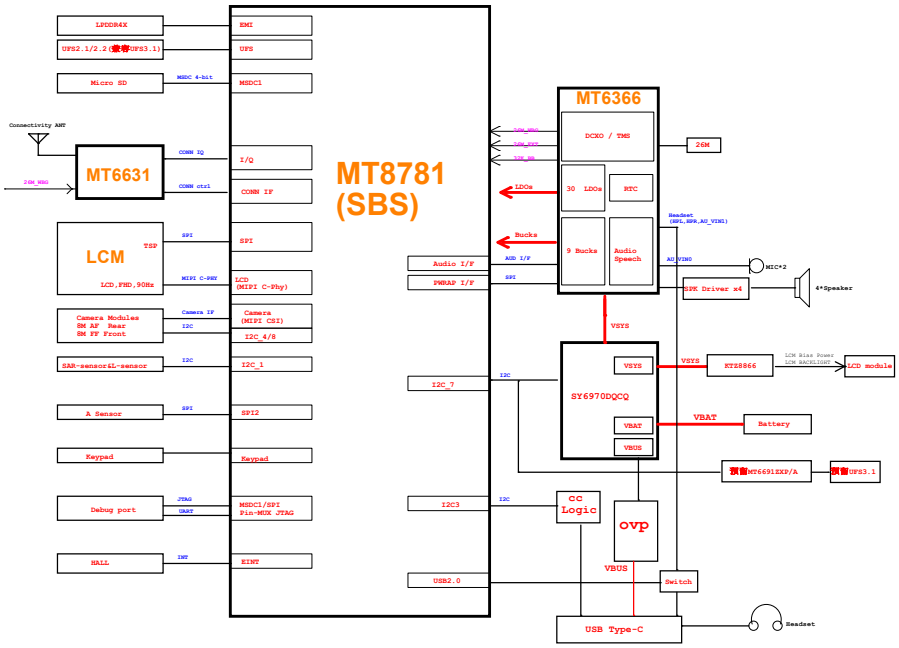

华勤通讯 Huaqin Telecom Technology Com.,Ltd		
Title	01.Block Diagram	
Size D	Project L83_MB_V1	Rev V1
Date: Saturday, July 02, 2022	Sheet 1 of 38	

Date	Version	Page	Change notice
2021.12.15		1	修改屏连接器型号和pin数，热仿真需求增加NTC3个。
2021.12.20		17	删除0.9V LDO
2021.12.21		25	G sensor 改为SPI通信
2021.12.24		26	OVP 改为 AW32410
2021.1.4		16	增加独立的LCM VDDI LDO 备用，NC

华勤通讯 Huaqin Telecom Technology Com.,Ltd		
Title 02.Change_Notice		
Size D	Project L83_MB_V1	Rev V1
Date: Saturday, July 02, 2022	Sheet 2 of 38	

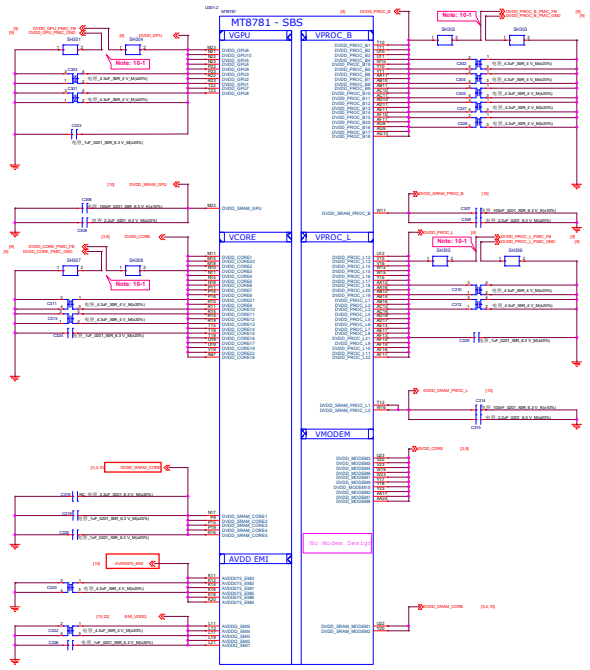

Schematic design notice of "10_BB_POWER_PDN" page.

Note 10-1: Differential pair of PMIC remote sense must be close to BB's ball.
Remote sense trace with GND shielding to PMIC (Differential)

华勤通讯 Huaqin Telecom Technology Com.,Ltd		
Title	03.BB_PDN1	
Size D	Project L83_MB_V1	Rev V1
Date: Saturday, July 02, 2022	Sheet 3 of 38	

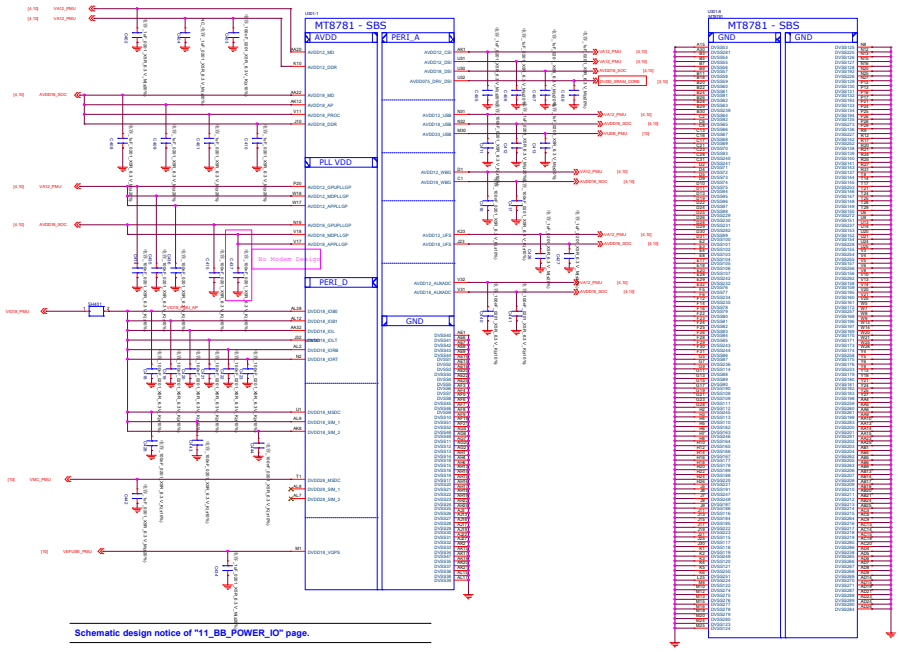

Schematic design notice of "11_BB_POWER_IO" page.

华勤通讯 Huaqin Telecom Technology Com.,Ltd		
Title	04.BB_IOVDD	
Size D	Project L83_MB_V1	Rev V1
Date: Saturday, July 02, 2022	Sheet 4 of 38	

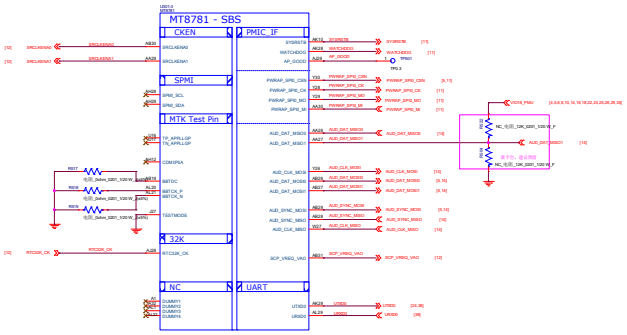

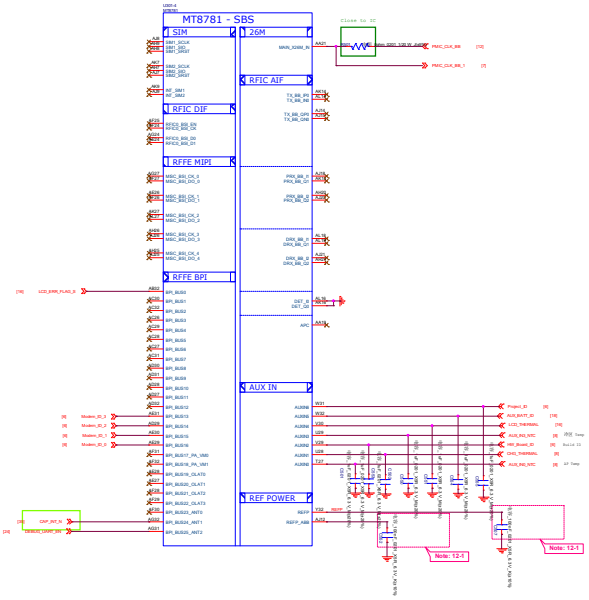

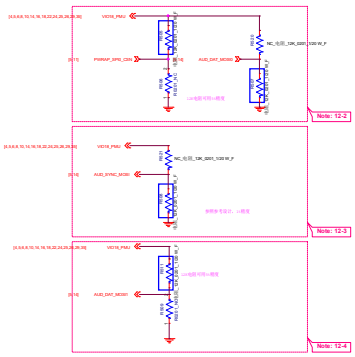

Schematic design notice of "12_BB_1" page:

Note 12-1: The de-coupling cap. for REFP have to be placed as close to BB as possible.

Note 12-2: "PWRAP_SPI0_CSN" and "AUD_DAT_MOSI0" pin features in trapping pin to enable JTAG.

PWRAP_SPI0_CSN	AUD_DAT_MOSI0	AP JTAG Mode	IO JTAG Mode
H (Default)	L (Default)	N/A	N/A
H (by external PU)	H (by external PU)	N/A	N/A
L (by external PD)	L	SPI5_CSB, SPI5_CLK, SPI5_MO, SPI5_MI, EINT13	N/A
L (by external PD)	H (by external PU)	SPI5_CSB, SPI5_CLK, SPI5_MO, SPI5_MI, EINT13	N/A

Note 12-3: "AUD_SYNC_MOSI" pin features in trapping pin to booting (UFS/eMMC).

AUD_SYNC_MOSI	Storage Booting Mode
L (Default)	Only UFS boot
H (by external PU)	Only eMMC boot

Note 12-4 "AUD_DAT_MOSI1" pin features in trapping pin for SW co-load.

AUD_DAT_MOSI1	Mode
L (Default)	LP4x-MCP
H (by external PU)	LP4x-Discrete

华勤通讯 Huaqin Telecom Technology Com.,Ltd		
Title	05.BB_1_PMIC_RF	
Size D	Project L83_MB_V1	Rev V1
Date: Saturday, July 02, 2022	Sheet 5 of 38	

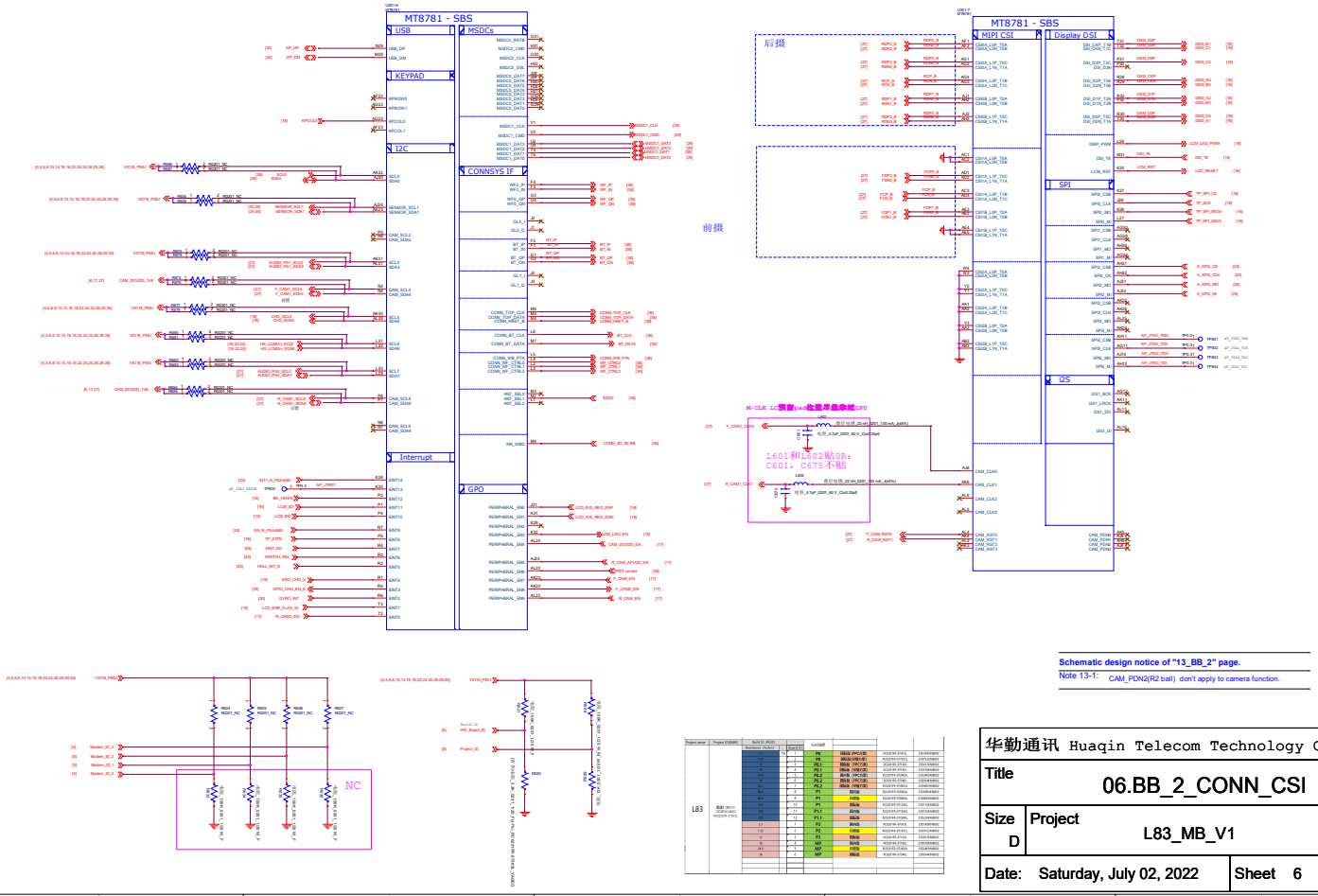

Schematic design notice of "13_BB_2" page.

Note 13-1: CAM_PDN2(R2 ball) don't apply to camera function.

Project name	Project EDMRS	Build ID JIRA					
		Hardware Model		Build ID	BARBAR		
L83	機型: 型號:L83 KCD2JR-0TS0L						
				0	P0	BB0b (PCN1B)	KCD2JR-0TS0L 230140000B0
				1	P0	BB0b(PCN1B)	KCD2JR-0TS0L 230142000B0
				2	P0.1	BB0b (1PCT,B)	KCD2JR-0TS0L 230143000B0
				3	P0.1	BB0b (1PCT,B)	KCD2JR-0TS0L 230144000B0
				4	P0.2	BB0b (1PCT,B)	KCD2JR-0TS0L 230146000B0
				5	P0.2	BB0b (1PCT,B)	KCD2JR-0TS0L 230148000B0
				6	P0.2	BB0b (1PCT,B)	KCD2JR-0TS0L 230149000B0
				7	P1	BB0b	KCD2JR-0TS0L 230150000B0
				8	P1	BB0b	KCD2JR-0TS0L 230151000B0
				9	P1	BB0b	KCD2JR-0TS0L 230152000B0
				10	P1.1	BB0b	KCD2JR-0TS0L 230154000B0
				11	P1.1	BB0b	KCD2JR-0TS0L 230155000B0
				12	P1.1	BB0b	KCD2JR-0TS0L 230156000B0
				13	P2	BB0b	KCD2JR-0TS0L 230158000B0
				14	P2	BB0b	KCD2JR-0TS0L 230159000B0
				15	P2	BB0b	KCD2JR-0TS0L 230160000B0
				16	P2	BB0b	KCD2JR-0TS0L 230161000B0
				17	MP	BB0b	KCD2JR-0TS0L 230163000B0
				18	MP	BB0b	KCD2JR-0TS0L 230164000B0
				19	MP	PB0b	KCD2JR-0TS0L 230166000B0

华勤通讯 Huaqin Telecom Technology Com.,Ltd			
Title	06.BB_2_CONN_CSI		
Size D	Project L83_MB_V1		Rev V1
Date: Saturday, July 02, 2022	Sheet 6 of 38		

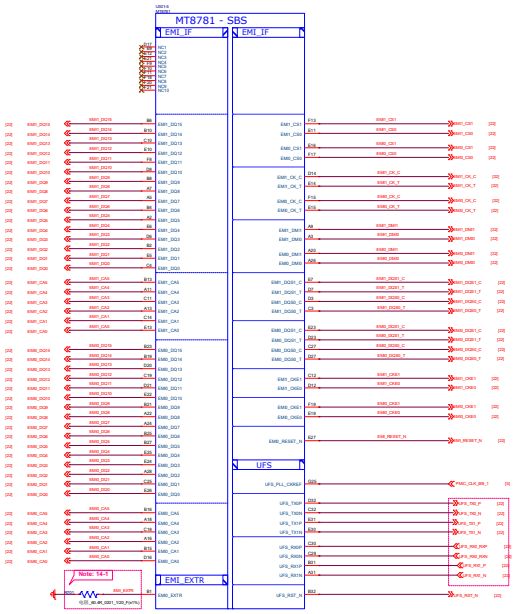

Schematic design notice of "14_BB_3_Interface" page:

Note 14-1: R4001 please select 60.4 ohm (1%) resistor

Note 14-2: Make sure TX/RX connection (T to in, R to out and P to t, N to c)

华勤通讯 Huaqin Telecom Technology Com.,Ltd		
Title	07.BB_3_DDR	
Size D	Project L83_MB_V1	Rev V1
Date: Saturday, July 02, 2022	Sheet 7 of 38	

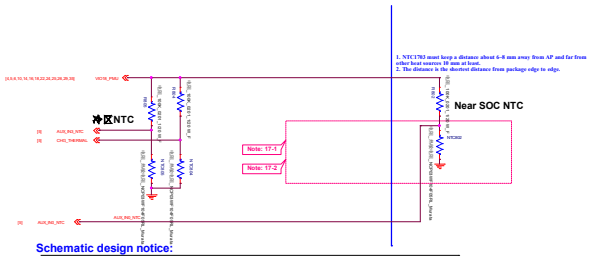

Schematic design notice:

Note 17-1: SW Default Configuration is as followings
AUX_IN0_NTC is for AP Temp.
AUX_IN1_NTC is for MHB PAMID Temp.

Note 17-2: If your design or placement is different with SW Default Config.
Please refer to "MTXXXX Thermal User Manuel.docx" and modify SW setting.

Schematic design notice of "08_BB_AUXADC" page.

	AUX_IN2 (RF SKU/PCB ID) (ADC range is 0.05~1.45V)
SKU1 EU+CHN+JPN	0.05V 0V(R0801=NC, R0802=100K)
SKU2 NA	0.21V 0.21V(R0801=750K, R0802=100K)
Reserved	0.42V 0.41V(R0801=330K, R0802=100K)
Reserved	0.62V 0.62V(R0801=191K,R0802=100K)
Reserved	0.82V 0.82V(R0801=120K, R0802=100K)
Reserved	1.04V 0.99V(R0801=100K, R0802=137K)
Reserved	1.24V 1.24V(R0801=100K, R0802=220K)
Reserved	1.45V 1.45V(R0801=100K, R0802=422K)

华勤通讯 Huaqin Telecom Technology Com.,Ltd		
Title	08.BB_AUXADC_Thermal	
Size D	Project L83_MB_V1	Rev V1
Date: Saturday, July 02, 2022	Sheet 8 of 38	

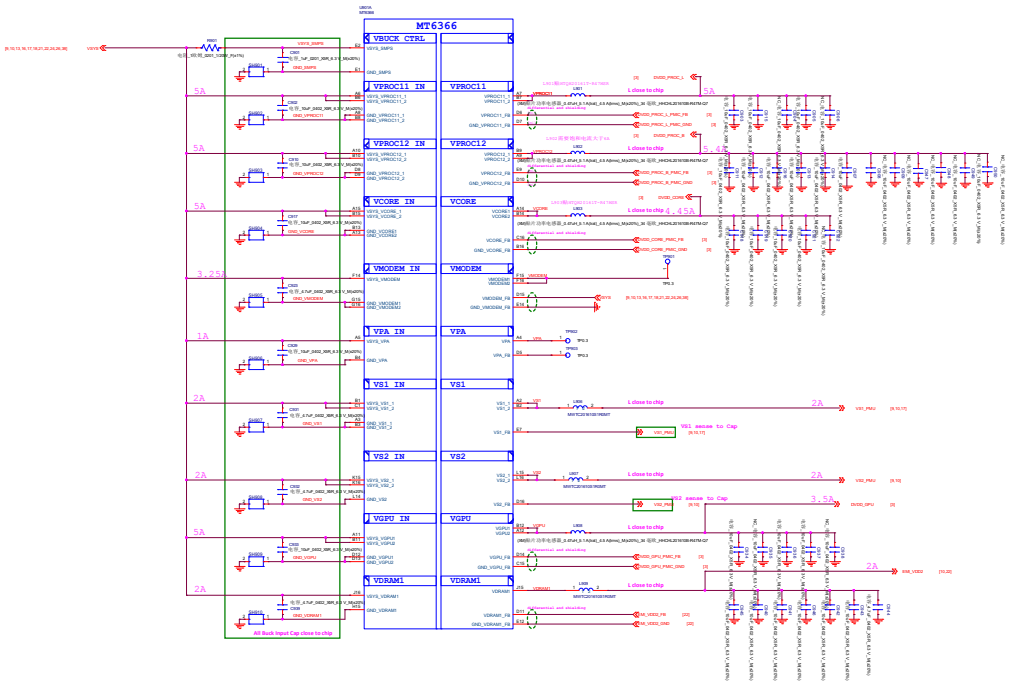

华勤通讯 Huaqin Telecom Technology Com.,Ltd		
Title	09.POWER_MT6366-Buck	
Size D	Project L83_MB_V1	Rev V1
Date: Saturday, July 02, 2022	Sheet 9 of 38	

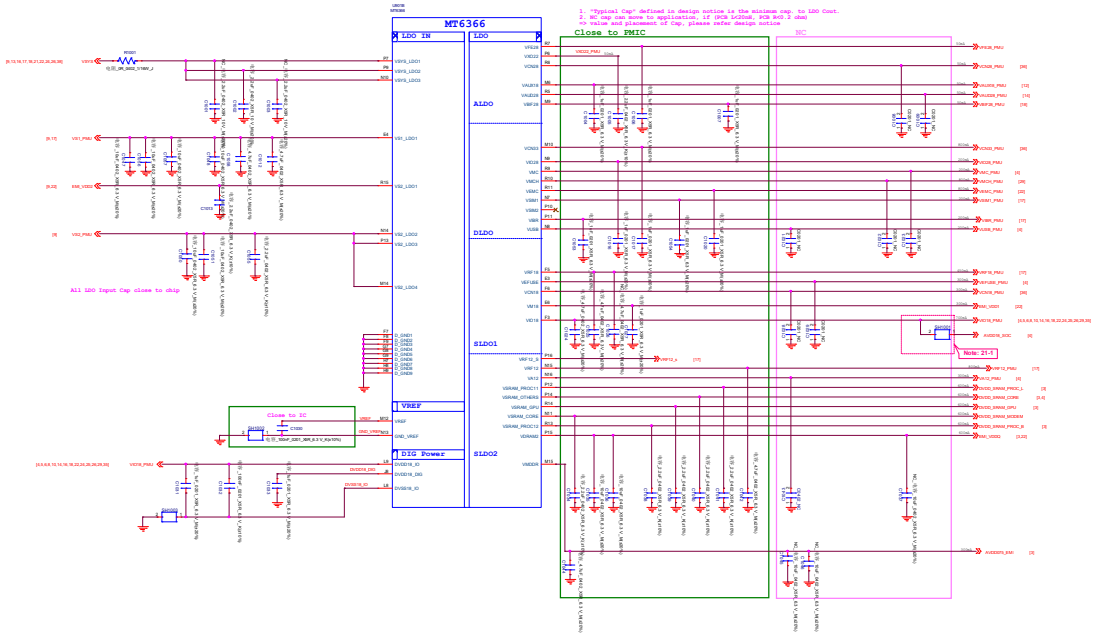

Schematic design notice of "21_POWER_MT6358-LDO" page.

Note 21-1: Please set SH2101 close to C2132, making star connection between VIO18_PMU and AVDD18_SOC near to LDO cap. C2132
Please also refer to MT6358 design notice for further detail design information

华勤通讯 Huaqin Telecom Technology Com.,Ltd		
Title	10.POWER_MT6366-LDO	
Size D	Project L83_MB_V1	Rev V1
Date: Saturday, July 02, 2022	Sheet 10 of 38	

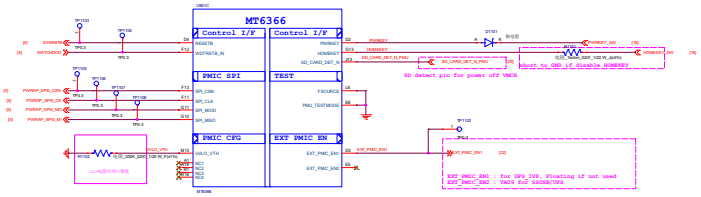

华勤通讯 Huaqin Telecom Technology Com.,Ltd		
Title	11.POWER_MT6366-General	
Size D	Project L83_MB_V1	Rev V1
Date: Saturday, July 02, 2022	Sheet 11 of 38	

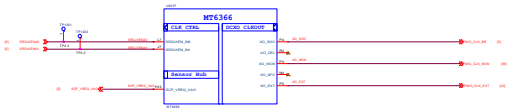

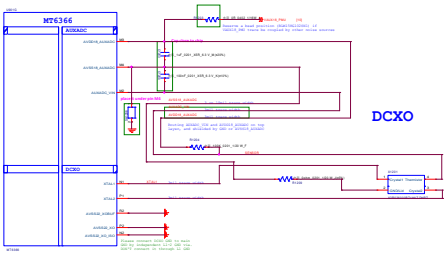

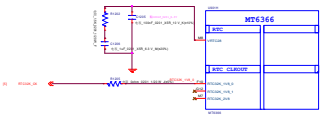

Schematic design notice of "82_SYSCLK_RTC32K" page:

华勤通讯 Huaqin Telecom Technology Com.,Ltd		
Title	12.MT6366_SYSCLK	
Size E	Project L83_MB_V1	Rev V1
Date: Saturday, July 02, 2022	Sheet 12 of 38	

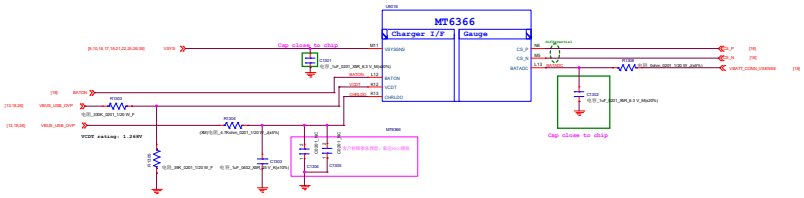

华勤通讯 Huaqin Telecom Technology Com.,Ltd		
Title 13.POWER_MT6366-Charger		
Size D	Project L83_MB_V1	Rev V1
Date: Saturday, July 02, 2022	Sheet 13 of 38	

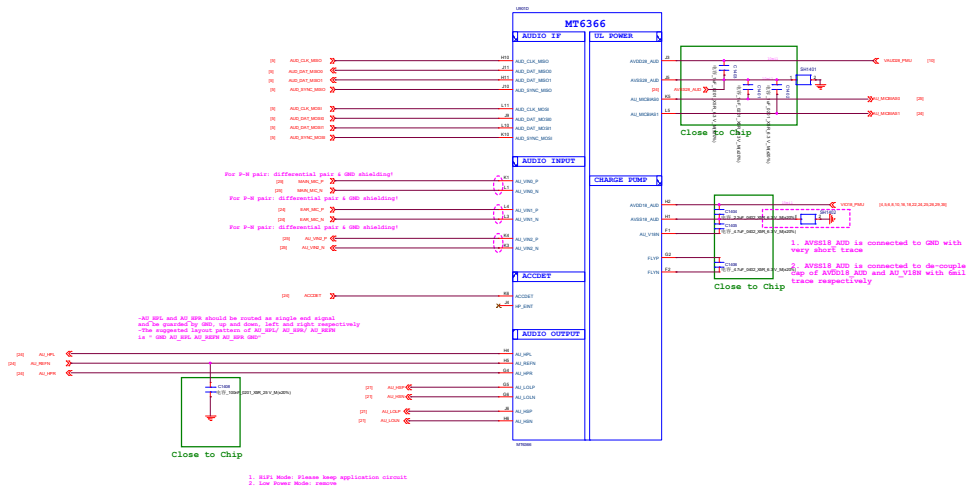

华勤通讯 Huaqin Telecom Technology Com.,Ltd		
Title	23.PERI_AUDIO_PMIC-IF	
Size D	Project L83_MB_V1	Rev V1
Date: Saturday, July 02, 2022	Sheet 14 of 38	

20220303版：客户确认TP_RESET pin NC

Z1601，Z1602，Z1603不贴

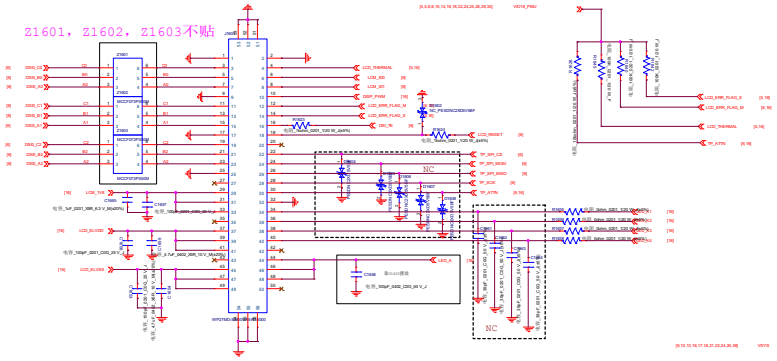

backlight/bias

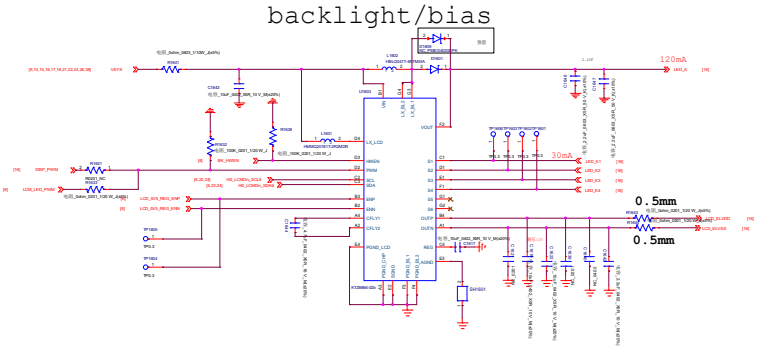

NC,Avaliable LDO

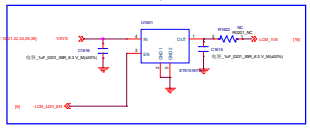

华勤通讯 Huaqin Telecom Technology Com.,Ltd			
Title	16.POWER_MT6371-HV		
Size D	Project L83_MB_V1		Rev V1
Date: Saturday, July 02, 2022		Sheet 16 of 38	

DVDD 1.2V/300mA Front DVDD 1.2V

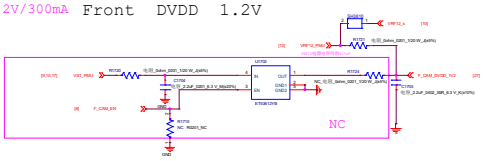

Rear DVDD 1.2V 兼容平台供电

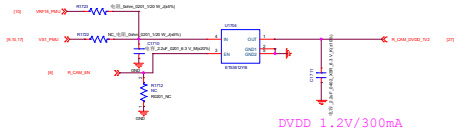

Front AVDD 2.8V 兼容平台供电

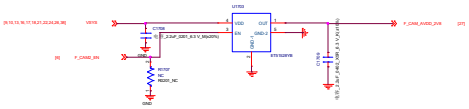

SUB Rear AVDD 2.8V 兼容平台供电

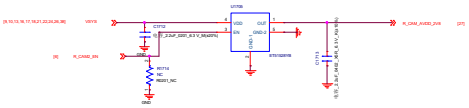

Front DOVDD (Rear DOVDD)1.8V 兼容平台供电

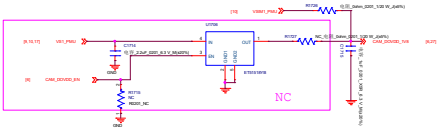

SUB Rear AFVDD 2.8V 兼容平台Vibr供电

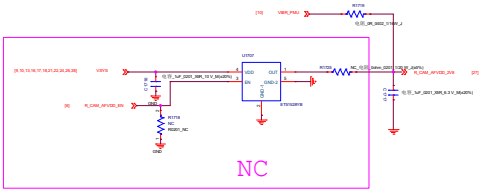

华勤通讯 Huaqin Telecom Technology Com.,Ltd		
Title 17.POWER_EXT		
Size D	Project L83_MB_V1	Rev v1
Date: Saturday, July 02, 2022	Sheet 17 of 38	

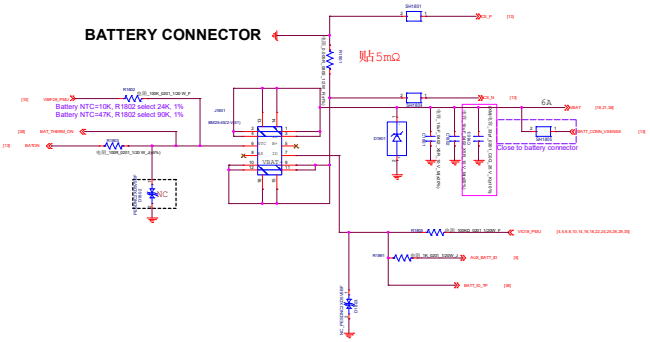

Power Key Spring

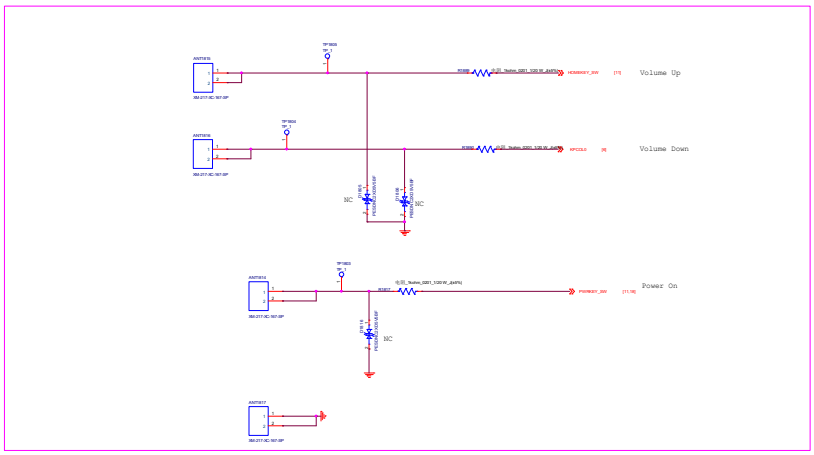

SW Charger

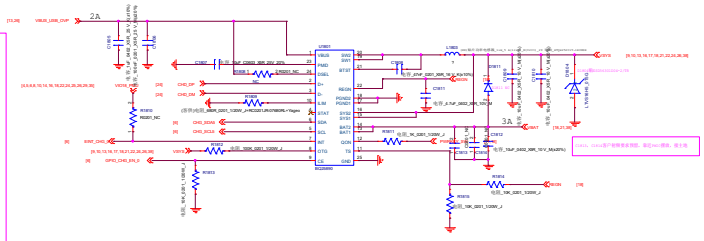

华勤通讯 Huaqin Telecom Technology Com.,Ltd		
Title 18.Charger/CC_LOGIC/BAT_conn		
Size D	Project L83_MB_V1	Rev V1
Date: Saturday, July 02, 2022	Sheet 18 of 38	

AUDIO PA

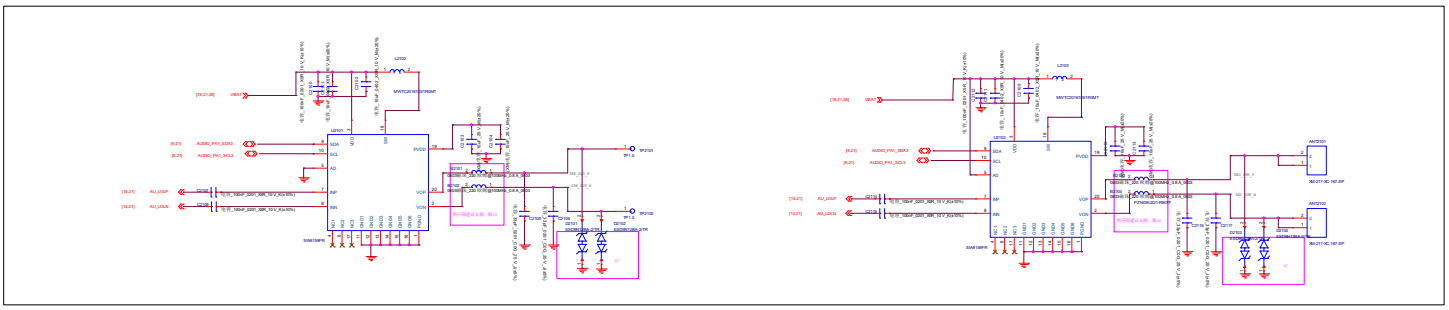

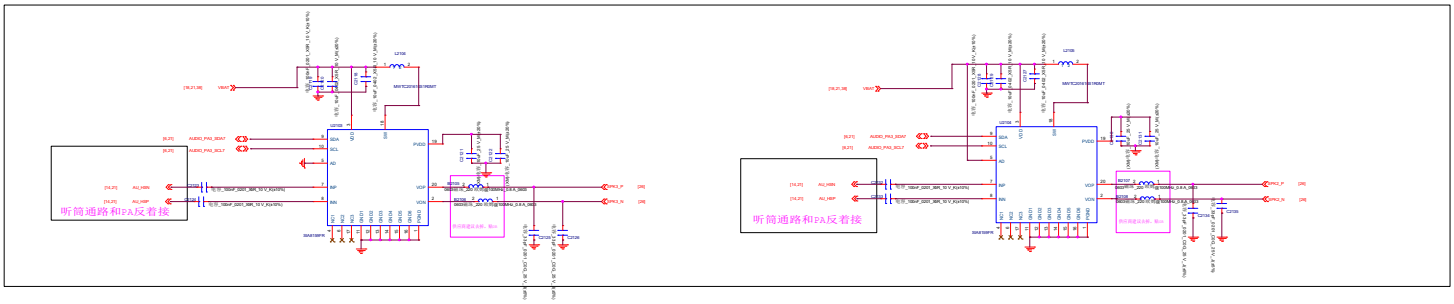

AD pin	A1	A0	I²C address (7-bit)
Connects to GND	0	0	0x58
Connects to SCL	0	1	0x59
Connects to SDA	1	0	0x5A
Connects to VDD	1	1	0x5B

华勤通讯 Huaqin Telecom Technology Com.,Ltd		
Title	21.AUDIO_SPK	
Size D	Project L83_MB_V1	Rev V1
Date: Saturday, July 02, 2022	Sheet 21 of 38	

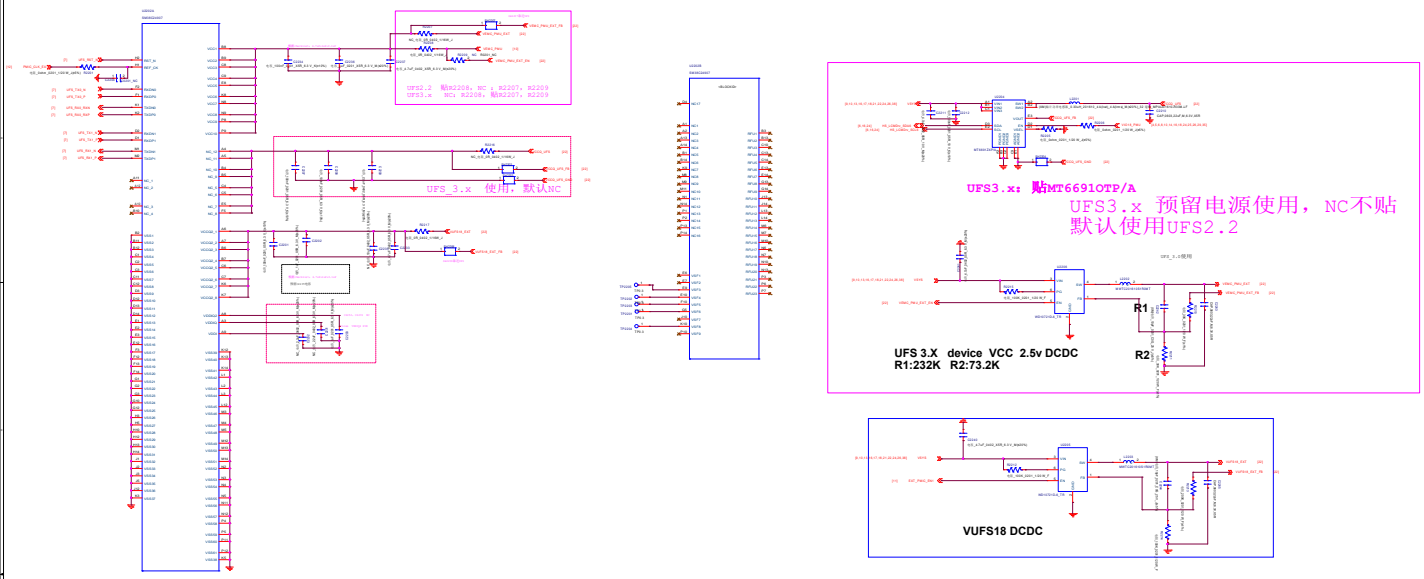

discrete LP4X

16Gb LPDDR4X

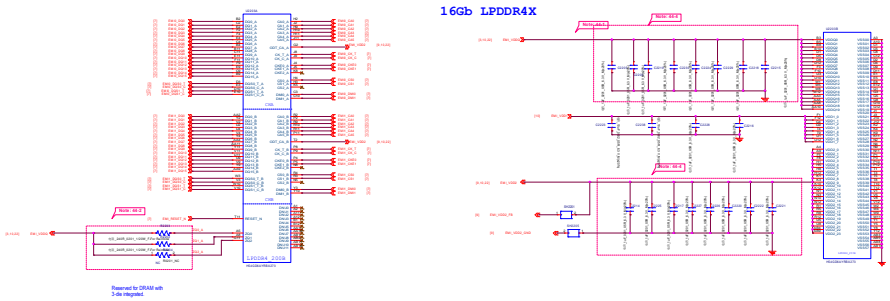

Schematic design notice of "45_Memory_Discrete_UFS" page.

Note 45-1: UFS2: VEMC: PMU(3V) + VUFS18_PMU
UFS3: VEMC: PMU (EXT(2.5V) + VUFS12_PMU
PS: Host only support to UFS2 (HS G3B)

Note 45-2: Refer to uMCP vendor's datasheet or MTK common design notice to get the recommended bypass cap. value for VCC/VCCQ/VDDI power domains of UFS.

Schematic design notice of "44_Memory_eMMC_LPDDR4X"

Note 44-1: Please refer to power supply related page select VDRAM 2 / VDRAM1 output voltage properly for LPDDR4X.

Note 44-2: DRAM ZQx resistor = 240ohm (1%) that must be connected to VDDQ.

Note 44-3: Please refer to eMCP vendor's datasheet or MTK common design notice to get the recommendation bypass cap. value for VCC/VCCQ/VDDI power domains of eMMC.

Note 44-4: VDD2 VDDQ decoupling cap: closed to DRAM ball.
For other cap for PMIC [>10uF, at PMIC page]:
please also refer to MMD and layout guide for placement.

华勤通讯 Huaqin Telecom Technology Com.,Ltd		
Title	22.Memory_UFS_LPDDR4X	
Size E	Project L83_MB_V1	Rev V1
Date: Saturday, July 02, 2022	Sheet 22 of 38	

Earphone Mic

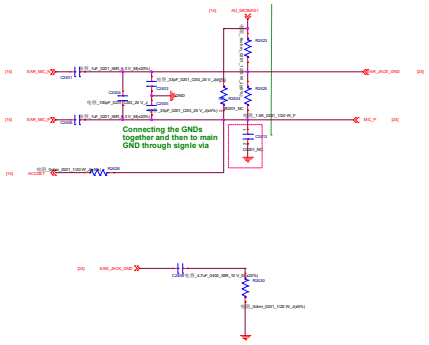

Earphone Microphone

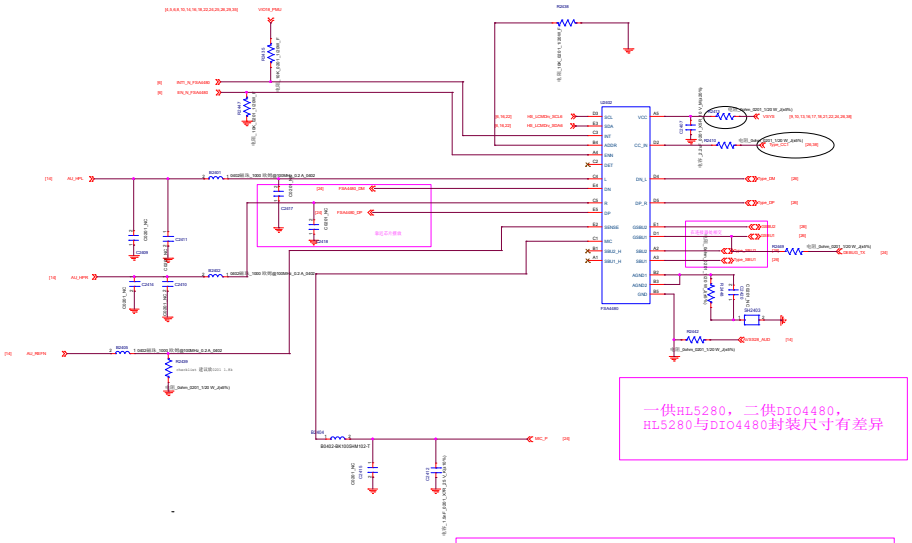

DP/DM SW

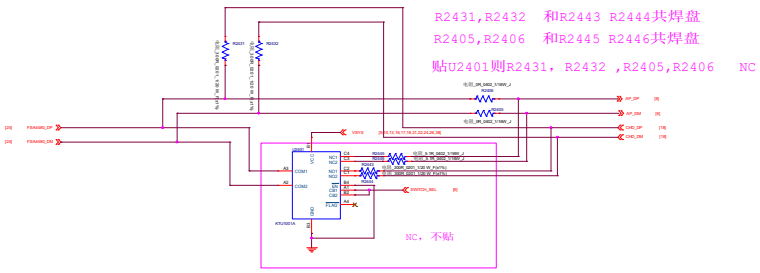

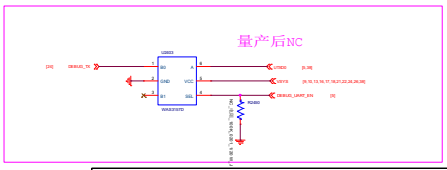

华勤通讯 Huaqin Telecom Technology Com.,Ltd		
Title	24.MIC_RCV/handset switch	
Size D	Project L83_MB_V1	Rev V1
Date: Saturday, July 02, 2022	Sheet 24 of 38	

HALL

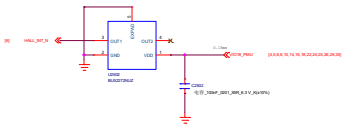

单光感

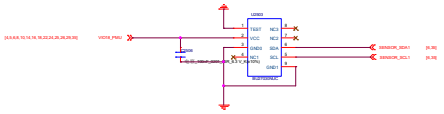

A Sensor

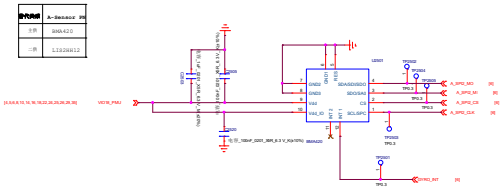

MIC1

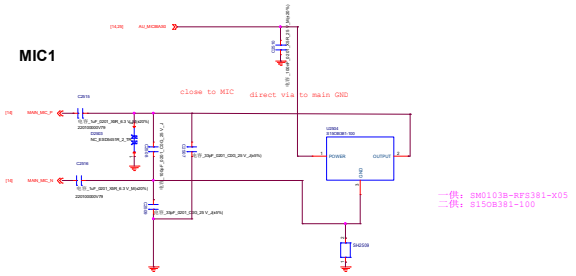

MIC2

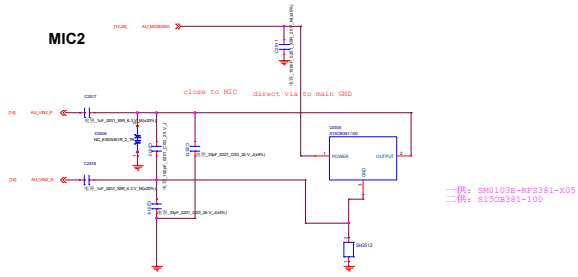

华勤通讯 Huaqin Telecom Technology Com.,Ltd		
Title 25.SENSOR		
Size D	Project L83_MB_V1	Rev V1
Date: Saturday, July 02, 2022	Sheet 25 of 38	

SUB board connector

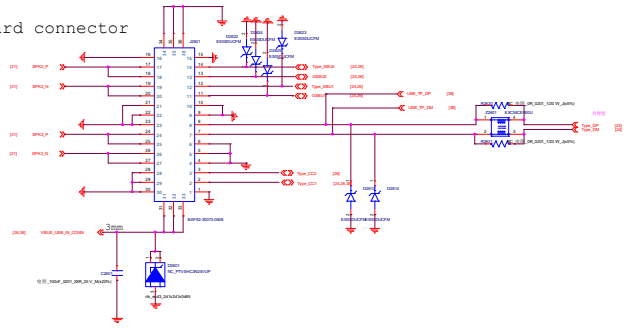

OVP

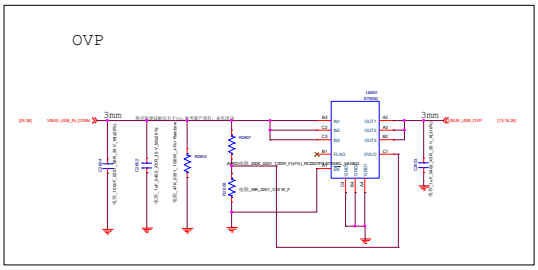

CC Logic

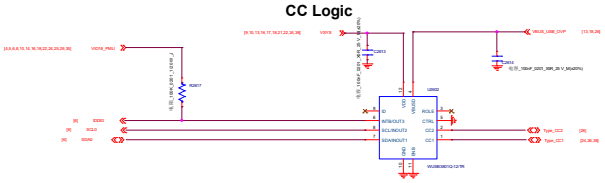

华勤通讯 Huaqin Telecom Technology Com.,Ltd		
Title	26.FP_KEY	
Size D	Project L83_MB_V1	Rev V1
Date: Saturday, July 02, 2022	Sheet 26 of 38	

★NOTE:

Front Camera - 8M

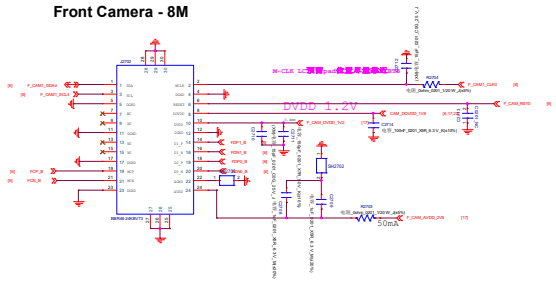

Updated 11/15

1	SDA	2	MCLK
3	SCL	4	DGND
5	DGND	6	RESET
7	NC	8	DOVDD
9	NC	10	DVDD
11	DGND	12	DGND
13	NC	14	D1_P
15	NC	16	D1_N
17	DGND	18	D0_P
19	MCP	20	D0_N
21	MCN	22	AGND
23	DGND	24	AVDD

Note:

Standard

Note: 1. 此为connector朝上
2. connector与Lens不同侧
Note: Showing for this picture:
1. Connector means upward.
2. Connector is not faced with Lens field on the same side.

Main Rear Camera -8M

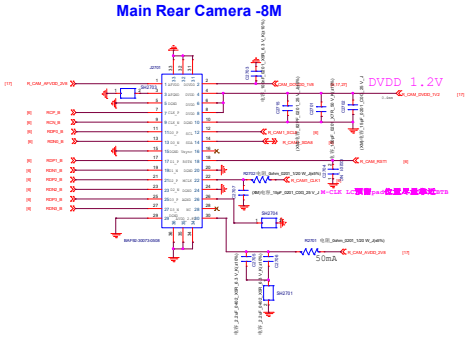

Updated 11/15

1	AFVDD	2	DOVDD
3	AFGND	4	DVDD
5	DGND	6	DVDD
7	CLK_P	8	DVDD
9	CLK_N	10	DGND
11	D0_P	12	SCL
13	D0_N	14	SDA
15	DGND	16	Vsync
17	D1_P	18	RSTN
19	D1_N	20	DGND
21	D2_P	22	MCLK
23	D2_N	24	DGND
25	D3_P	26	AGND
27	D3_N	28	NC
29	DGND	30	AVDD_2.8V

Note:

Standard

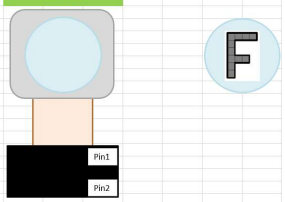

Note: 1. 此为connector朝上
2. connector与Lens同侧
Note: Showing for this picture:
1. Connector means upward.
2. Connector is faced with Lens field on the same side.

华勤通讯 Huaqin Telecom Technology Com.,Ltd		
Title		
Size D	Project L83_MB_V1	Rev V1
Date: Saturday, July 02, 2022	Sheet 27 of 38	

3IN3 SIM1&SIM2&SD

SD CARD

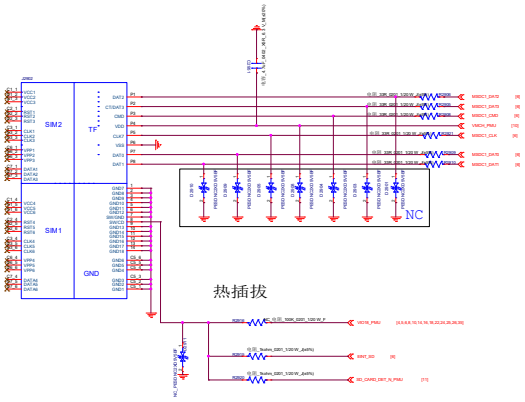

华勤通讯 Huaqin Telecom Technology Com.,Ltd		
Title 29.SIM_SD_BATT		
Size D	Project L83_MB_V1	Rev V1
Date: Saturday, July 02, 2022	Sheet 29 of 38	

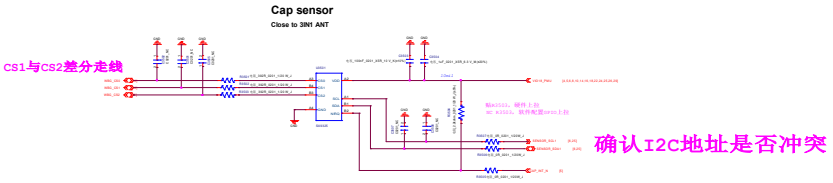

华勤通讯 Huaqin Telecom Technology Com.,Ltd		
Title	35.ANT_SAR SENSOR	
Size E	Project L83_MB_V1	Rev V1
Date: Saturday, July 02, 2022	Sheet 35 of 38	

WIFI2.4G/5G_ANT

MT6631

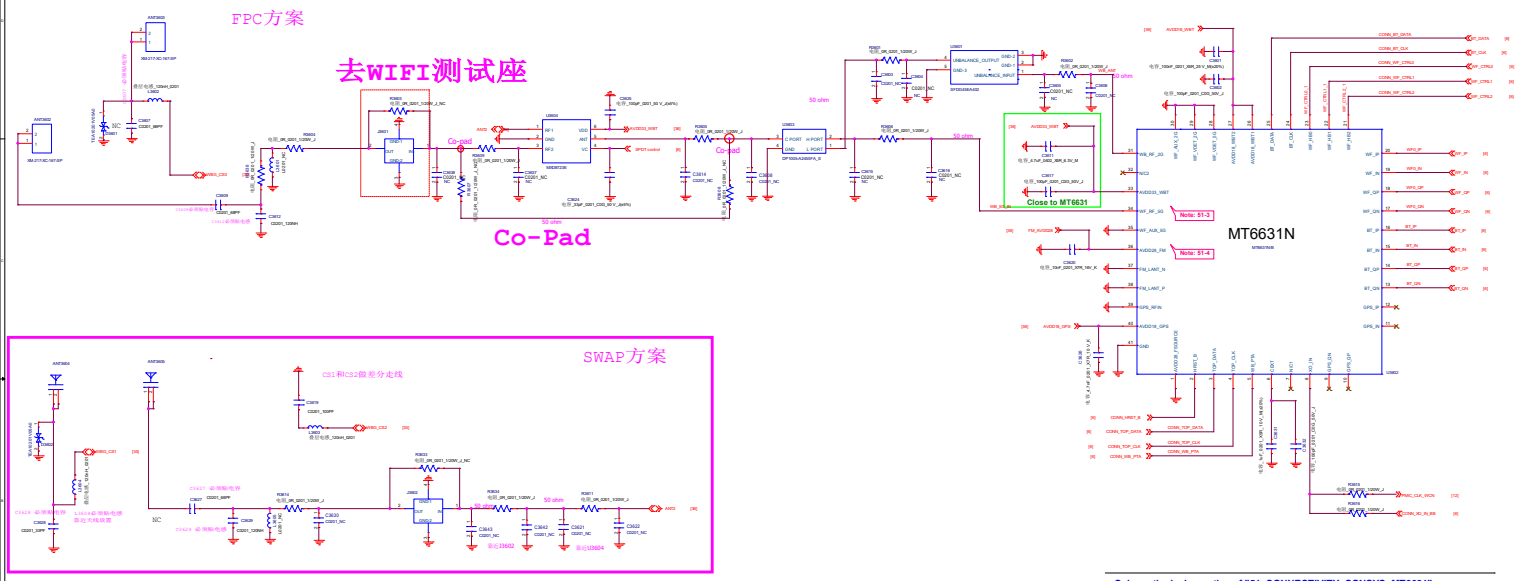

Schematic design notice of "51_CONNECTIVITY_CONSYS_MT6631"	
Note 51-1:	For R5015 size, please select 0402 size or larger one
Note 51-2:	Please refer to MT6765 Baseband design notice for VCN33 LDO selection guide
Note 51-3:	If WiFi 5G not support, connect pin 34(WF_RF_5G) to GND
Note 51-4:	Pin 36 (AVDD28_FM) must be connected to VCN28 even if FM not support

华勤通讯 Huaqin Telecom Technology Com.,Ltd		
Title	36.WCN_MT6631	
Size D	Project L83_MB_V1	Rev V1
Date: Saturday, July 02, 2022	Sheet 36 of 38	

华勤通讯 Huaqin Telecom Technology Com.,Ltd		
Title	37_WCN_ANT	
Size D	Project L83_MB_V1	Rev V1
Date: Saturday, July 02, 2022	Sheet 37 of 38	

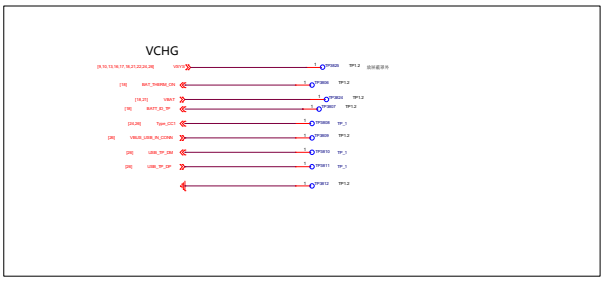

螺丝孔是否接地？

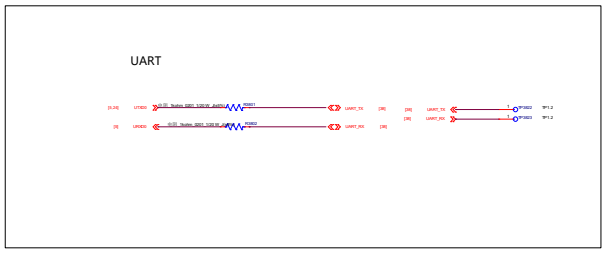

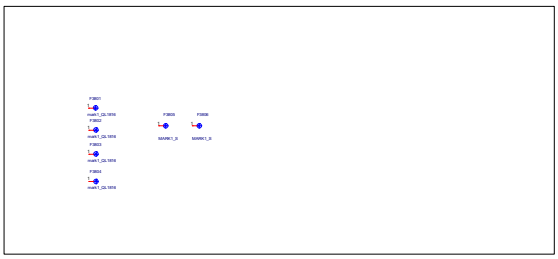

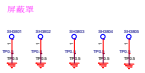

华勤通讯 Huaqin Telecom Technology Com.,Ltd		
Title 38.TEST_POINT_SHIELD		
Size D	Project L83_MB_V1	Rev V1
Date: Saturday, July 02, 2022	Sheet 38 of 38	

SPK

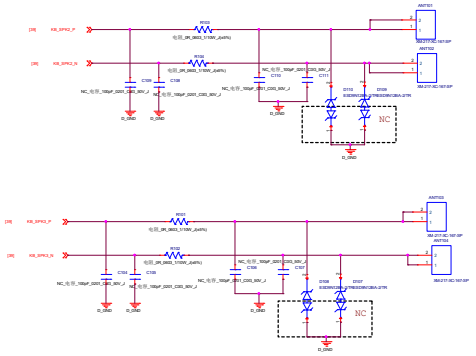

SUB board connector

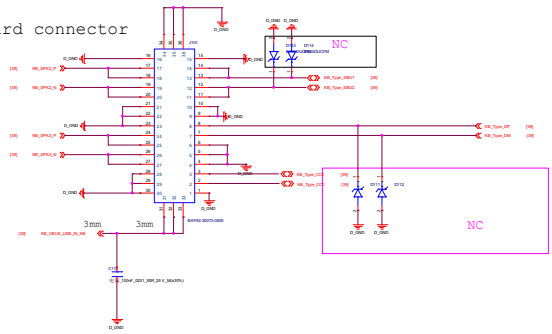

16 PIN TYPE C Connection

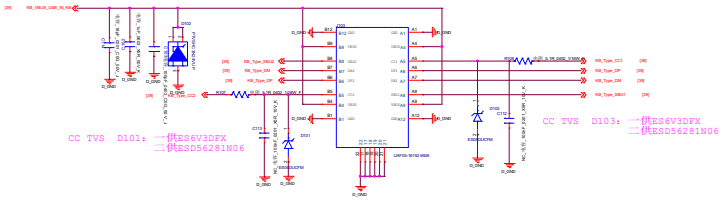

光学定位孔

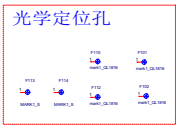

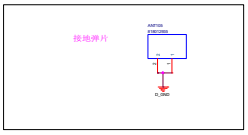

Title	SCH_UB	
Size	Document Number	Rev
C	UB_SCH_V1.0	1.0
Date:	Tuesday, July 08, 2025	Sheet 16 of 16